Meeting Between Federal Reserve Staff and Representatives of TriOptima
August 11, 2011

Participants: Erik Heitfield, Johnson Elugbadebo and Sean Chu (Federal Reserve Board).

Raf Pritchard (TriOptima); Jim Newsome (Delta Strategy Group); and Patrick McCarty (ICAP)

Meeting Summary: Federal Reserve Staff met with representatives of TriOptima to discuss mandatory clearing and swap execution facility registration requirements under Title VII of the Dodd-Frank Act. TriOptima's representatives discussed a proposed portfolio risk management service designed reduce counterparty credit risk arising from non-cleared OTC transactions. The service works by reducing a set of market participants' bilateral potential future exposures to one another, while maintaining each participant's aggregate portfolio risk profile. The bilateral risk reduction would occur through the execution of plain vanilla swaps designed to reduce bilateral portfolio sensitivities to underlying risk factors. Importantly, the proposed approach could only work if these risk-reducing trades are made between counterparties and not novated through a central counterparty. For this reason, TriOptima wants these plain vanilla trades to be exempt from mandatory clearing requirements. Furthermore, since these trades are risk flattening and do not contribute to price discovery (because participants maintain their portfolio risk profile across counterparties), TriOptima wants this service to be exempt from registration as a swap execution facility.

A copy of the materials distributed at the meeting is provided below.

Systemic risk reduction in OTC derivatives

Overview

- A large majority of OTC derivatives will be cleared in CCP's
- Some OTC derivatives will remain bilateral, generating interconnectedness and systemic risk
- The degree of interconnectedness and systemic risk can be lowered by appropriate injections of new bilateral trades, off-setting risks generated by non-clearing eligible trades
- Such portfolio risk reducing trades need to be exempt from mandatory clearing in order to fulfill their purpose
- A portfolio risk management service should not require a SEF registration

OTC Derivatives

- In the OTC derivatives market, there are both trades cleared with a CCP as well as trades held bilaterally

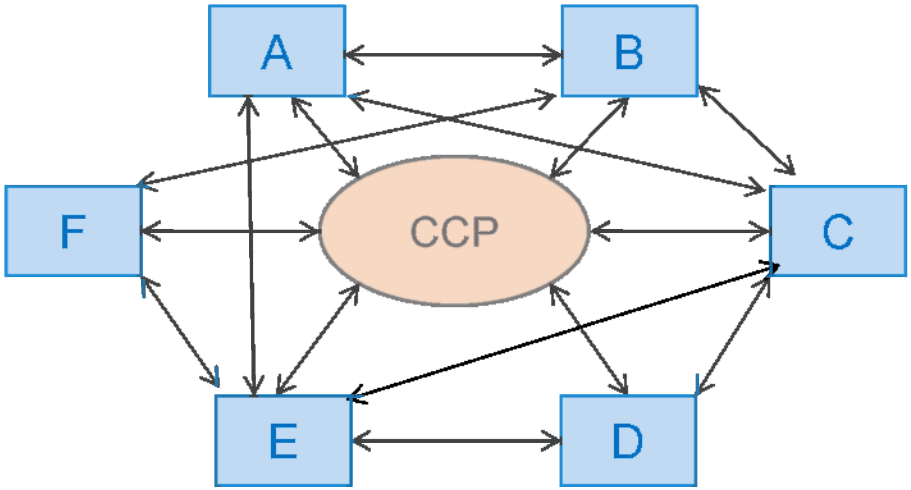

- Each arrow represents a portfolio of trades of different asset classes, currencies and products

Risk and risk mitigation

- A portfolio of trades has
  - A current net mark-to-market value
  - A portfolio risk profile, showing the sensitivity of the mark-to-market value to changes in a number of market parameters
- The net mark-to-market value represents a *credit exposure* for one of the parties which is mitigated by *variation margin or collateral*
- The portfolio risk represents a *potential credit exposure* because of the risk that the mark-to-market value will change between the last posting of collateral and the time the portfolio can be hedged in case the counterparty defaults.
  - This potential credit exposure is mitigated by posting *initial margin or independent amounts, or reserving capital*
  - Additional risk mitigation from default fund and capital reserves

TriOptima

confidential - sensitive

Example of portfolio risk

- A *portfolio* is defined as *all trades* belonging to the *same netting set* between *two parties*
  - An ISDA master agreement with CSA can include any type of asset class and product
- The portfolio risk is then the sensitivity of the aggregate mark-to-market value to changes in
  - Interest rate swap rates of different maturities and currencies
  - Credit spreads of different names
  - FX rates, Oil prices, etc
- There are potentially many portfolio risk values, although normally a few dozen dominate the variability of the portfolio mark-to-market value

TriOptima

confidential - sensitive

Portfolio risk

- In addition to creating potential credit exposure, a large portfolio risk creates a number of other destabilizing effects

  – Larger disagreements on where the current net mark-to-market value is, leading to disputes and insufficient variation margin/collateralization

  – Larger movements of mark-to-market values leading to large variation margin/collateral transfers

  – The portfolio risk needs to be hedged in case CP defaults which may be hard in stressed environment

- Reducing portfolio risk is key in enhancing systemic stability!

TriOptima

confidential - sensitive

CCP clearing and portfolio risk

- CCP clearing only *indirectly* reduces portfolio risk between members
  - A clearing eligible trade may be hedging a set of non-clearable trades
- A large portfolio risk between a CCP and a member generates a large initial margin
- The posting of initial margins drains liquidity from the financial system
  - Procyclicality

TriOptima

confidential - sensitive

How to manage portfolio risk?

- A direct way of reducing portfolio risk is to make trades which off-set existing risks
  - Portfolio risk is proportional to the absolute value of the market parameter sensitivity, so a large value is bad for both parties, and both parties have an incentive to bring it down
  - For an individual institution, there will in most cases be some counterparties where they are ”long” and other counterparties where they are ”short”
  - Bringing a number of such institutions together, you can find a set of trades that reduce portfolio risk for each institution, while the overall market risk of the trades is zero for each institution.
    - Flatten the peaks against the troughs in the portfolio risk landscape

TriOptima

confidential - sensitive

How to manage portfolio risk?
Example

- Zoom in on just one of the risk parameters
  - pv01 in millions for USD 10y
  - In a live run, multiple risk parameters will be handled simultaneously
- Assume
  - 3 clearing members and a CCP
  - Portfolio risk according to graph and table
- The total ”system risk” is then 120

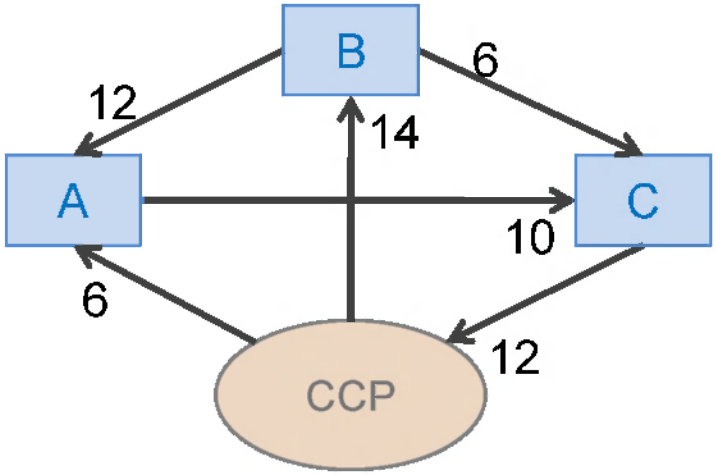

	A	B	C	CCP	Net	SumAbs
A	0	12	-10	6	8	28
B	-12	0	-6	14	-4	32
C	10	6	0	-12	4	28
CCP	-6	-14	12	0	-8	32
						120

TriOptima

confidential - sensitive

How to manage portfolio risk?
Example

- If the following trades are made:
  - New Bilateral Trades:
    - A-B -9
    - A-C +11
    - B-C +4
  - New Trades novated to CCP:
    - A-B -2
    - B-C -15
- As can be seen the net market risk impact for all parties is zero

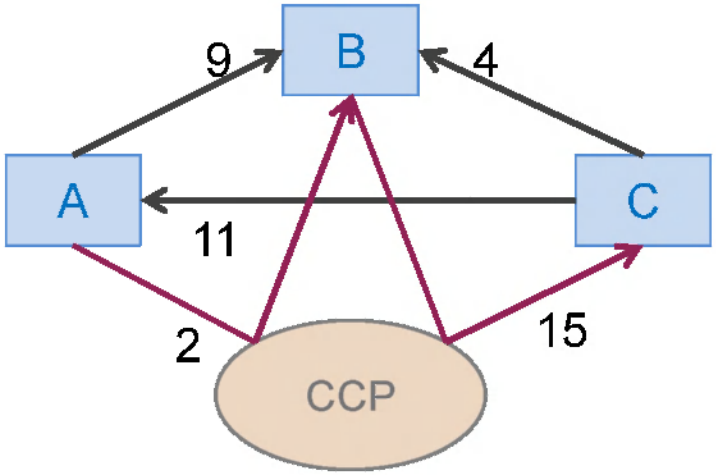

	A	B	C	CCP	Net
A	0	-9	11	-2	0
B	9	0	4	-13	0
C	-11	-4	0	15	0
CCP	2	13	-15	0	0

TriOptima

confidential - sensitive

How to manage portfolio risk?
Example

- Then the resulting portfolio risks become:

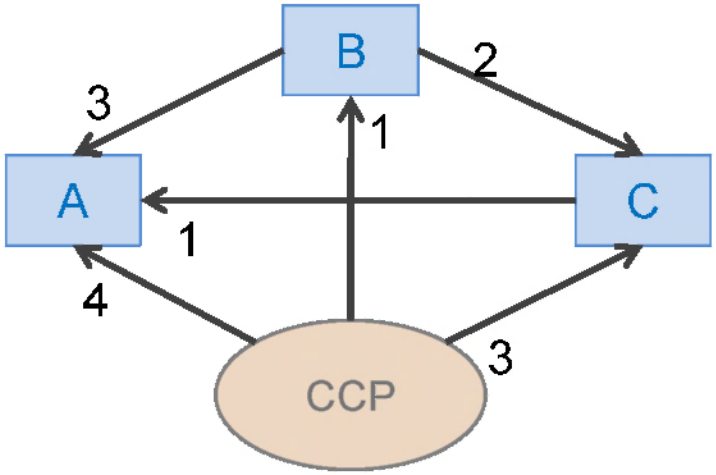

- The total ”system risk” is then just 28, down from 120 i.e. a 77% reduction

	A	B	C	CCP	Net	SumAbs
A	0	3	1	4	8	8
B	-3	0	-2	1	-4	6
C	-1	2	0	3	4	6
CCP	-4	-1	-3	0	-8	8
						28

TriOptima

confidential - sensitive

Management of portfolio risk

- The portfolio risk flattening trades are plain vanilla products, in most case clearing eligible
  - Par swaps or IMM swaps for interest rates
  - Credit index trades and liquid single names
- In order for this risk reduction to happen, such portfolio management trades need to be exempt from the mandatory clearing requirements.
- The risk flattening exercise is not a price forming event since no participant changes its overall market position
  - Insensitive to price used for the new trades
- Providing a portfolio risk management service should not require registration as a SEF

TriOptima

confidential - sensitive

Thank you